MICRO SWITCH
FREEPORT, ILLINOIS, U.S.A.
A DIVISION OF HONEYWELL
FED. MFG. CODE 91929

SWITCH – ENCLOSED

CATALOG LISTING
BZE6-2RN7

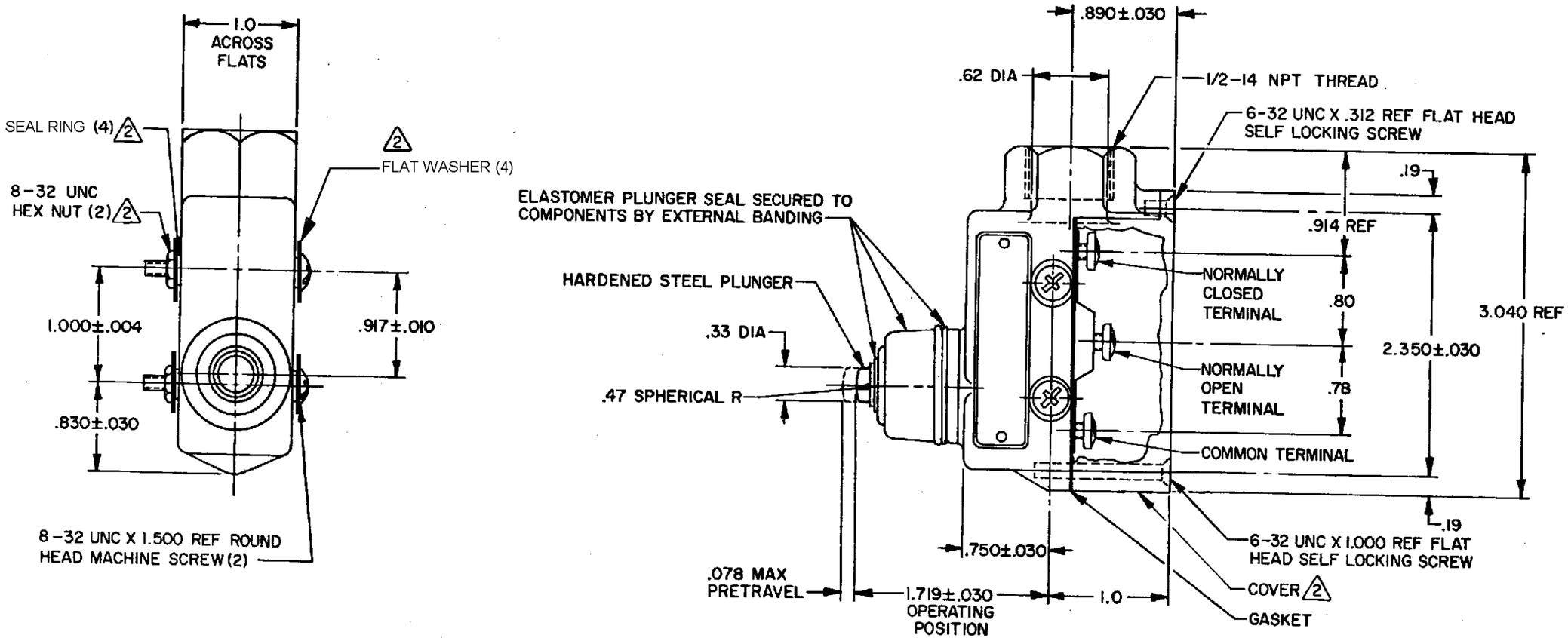

NOTES –

1 – 6-32 UNC X .219 REF BINDING HEAD TERMINAL SCREW AND CUPWASHER (3)
2 FURNISHED UNASSEMBLED

3 - SEAL RATING: NEMA1,3
IP54

THIS DRAWING COVERS A PROPRIETARY ITEM AND IS THE PROPERTY OF MICRO SWITCH, A DIVISION OF HONEYWELL. THIS DRAWING IS NOT TO BE COPIED OR USED WITHOUT THE APPROVAL OF MICRO SWITCH.

CHARACTERISTICS	ELECTRICAL DATA	SCALE FULL
OPERATING FORCE ------ 9-24 OZ	CONTACT ARRANGEMENT SPDT	DO NOT SCALE PRINT
RELEASE FORCE ------ 4 OZ MIN	15A-125, 250 OR 480 VAC, 2A-600 VAC 1/8HP-125 VAC; 1/4HP-250 VAC CODE L74 1/2A-125 VDC; 1/4A-250 VDC	UNLESS OTHERWISE NOTED DIMENSIONS ARE IN INCHES
DIFFERENTIAL TRAVEL ----.002 MAX		TOLERANCES ARE:
OVERTRAVEL ----------.219 MIN		ONE PLACE (.0) ±.030 TWO PLACE (.00) ±.015 THREE PLACE (.000) ±.005 ANGLES ±
BASIC SWITCH REPLACEMENT --- BZ-2RN730	CE 1.5A, 240Vac	WEIGHT .56 LB

M BZE6-2RN7

REPLACES | RELEASE NO. | DRAWING NUMBER | ISSUE 12 | 22 NOV 05 | BP | CHECK

REVISIONS

A	NEW DWG CO-15200	K S W 8 AUG 77
B	CO38200	TMM 6 OCT 77
C	CO 39504	GLH 29 NOV 77
D	CO 53191-H	T M M 18 MAY 84
E	CO55989	J A P 8 NOV 84
F	CO 54958-H	WJM 8 FEB 85
G	CO72476	MAM 4 SEP 92
H	CO 77179A	K D R 17 FEB 94
J	0017057	VKR 22NOV05

CHECK 19 AUG 77 | CHECK 19 AUG 77 | CHECK GCH | CHECK

DRAWN K S W 8 AUG 77

FO-5285 1-A